*Paper B24*

# Polycarbodiimide Crosslinkers in Leather Finish Applications

André Derksen[1], Ans van den Goorbergh[2]
[1] Stahl International bv, Sluisweg 10, 5145 PE Waalwijk, The Netherlands, Phone: 31-416-689284, Fax: 31-416-689203, e-mail: Andre.Derksen@Stahl.com
[2] Stahl International bv, Sluisweg 10, 5145 PE Waalwijk, The Netherlands, Phone: 31-416-689594, Fax: 31-416-689203, e-mail: Ans.van-den-Goorbergh@Stahl.com

## 1. Introduction

Crosslinking is widely practiced in nearly all of the coatings industries with the main purpose to improve the performance of the coating. These improvements include wear, abrasion and chemical resistances and toughness[1]. The improved performance originates from the formation of a continuous three-dimensional network, which may be formed by the crosslinker alone, or by reaction of the crosslinker with the binder[2]. Also in the leather industry crosslinking is employed widely, as for instance, practically all leather used for automotive seating or steering wheel covers is crosslinked in either the top coat or top coat and base coat.

Crosslinking, especially network formation, has the potential to reduce elongation and to increase tensile strength, thus polymer hardness. One must therefore exercise care not to overdo crosslinking. For hard coatings on rigid substrates one can go all out with crosslinker; but low levels may be best for soft coatings on extensible, flexible substrates such as leather.

The most prevalent crosslinking system in the leather industry involves the use of water-dispersible oligomeric polyisocyanates. The polymeric binders in such aqueous coatings are either polyurethane dispersions, or acrylic latexes or the two used in combination. In general, the use of such polyisocyanate crosslinkers is not based on a reaction with functional groups in the coatings, however they form an interpenetrating network upon the reaction with water. Main drawbacks of polyisocyanate crosslinkers are their sensibility to moisture and their limited pot life. Aziridines are another type of crosslinker and they were for a long time the gold standard for property development, but their use is decreasing because of concerns about their toxicity and handling.

Polycarbodiimides are less used as crosslinkers in leather and artificial leather finishing, but the situation concerning polycarbodiimides is changing. The reason is that now there are new types available which are very advantageous. These are the stable water-based polycarbodiimides and the newest developed aqueous and VOC-free types. These are extremely easy to use and exhibit a much longer useful pot life than isocyanates could achieve. In addition, 'multifunctional' water-dispersible polycarbodiimides are available that display a very high crosslinking performance.

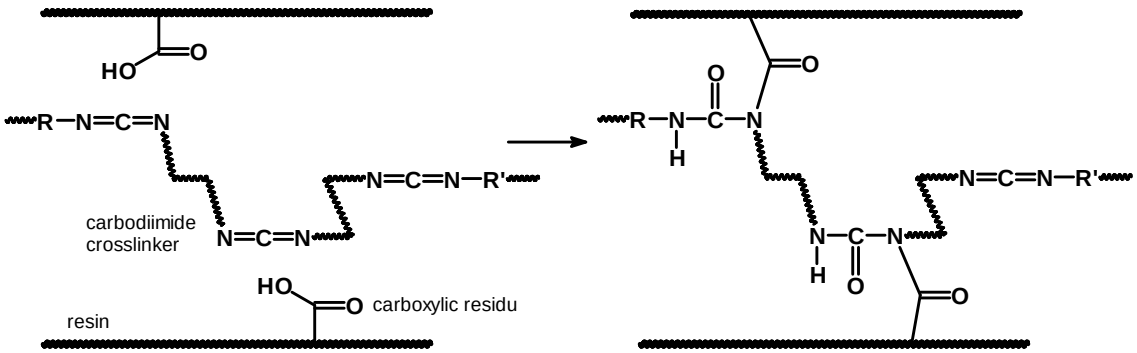


**Scheme 1:** *Reaction of carboxylic residue from a resin with a Polycarbodiimide crosslinker*

The chemistry of polycarbodiimide crosslinking involves mainly the reaction of carboxylic acid (–$CO_2H$) groups in acrylic latexes or in polyurethane dispersions with carbodiimide (–N=C=N–) groups

of the crosslinker. After the formation of an instable intermediate a stable N-acylurea is formed as shown in Scheme 1.[3,4,5,6] Since the polycarbodiimide contains several –N=C=N– groups, one polycarbodiimide molecule can react with carboxyl groups on different polymer chains tying them together forming a three-dimensional network. Reaction of carboxylic acid with carbodiimide can be quite fast under ambient or mild thermal cure conditions.

Polycarbodiimides are generally synthesized through a catalytic cycle from isocyanate compounds[7,8,9,10], as depicted in Scheme 2. In this catalytic cycle, a phospholene catalyst first reacts with an isocyanate, upon which a rearrangement occurs and carbon dioxide is liberated. This intermediate species can subsequently react with another isocyanate group and upon a second rearrangement a carbodiimide moiety is formed and the phospholene catalyst is regenerated. When multifunctional isocyanates are used, the newly formed carbodiimide-containing molecule can again take part in the carbodiimide forming reaction and products can be made with multiple carbodiimide moieties.

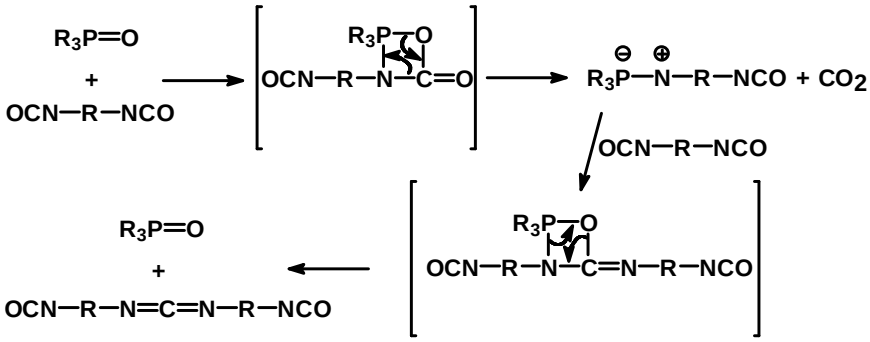


**Scheme 2:** *Synthesis of (poly)carbodiimides*

Solvent-based polycarbodiimides exist for many years, and solvent-based polycarbodiimides that can be dispersed in water exist almost as long. These can be readily used as crosslinker in aqueous latexes such as polyurethane dispersions and acrylic latexes. An enormous boost in the crosslinking performance of polycarbodiimide crosslinkers was given by so-called 'multifunctional' polycarbodiimides. These solvent-based polycarbodiimides contain additional functional groups which have a reactivity towards functional groups in the resin, or towards corresponding groups, i.e. by self-condensation or self-addition. This results in an increased crosslinking capacity, since both the carbodiimide and the additional reactive functional group contribute to the crosslinking.[11]

The latest development in polycarbodiimide crosslinkers is the emergence of stable aqueous polycarbodiimides.[12,13,14] In essence, this is remarkable because an important use of carbodiimides is as water scavengers in plastics, such as polyesters, where the carbodiimide scavenges water by hydrolysis and thus prevents the hydrolysis of other groups or bonds. Some product and recipe parameters have to be selected wisely to be able to obtain stable aqueous polycarbodiimides and this selection ultimately influences the stability of the aqueous polycarbodiimide, the pot life of such aqueous polycarbodiimide in aqueous resins and the reactivity of the polycarbodiimide crosslinker. Hence, multiple types of aqueous polycarbodiimides are available in the market. Main advantages of such polycarbodiimides supplied in water are: A) their easy of use is exceptionally good because they can be readily mixed into aqueous systems; B) they can be manufactured with zero VOC; C) they are non-harmful, non-toxic and non-irritant; D) they provide pot life to application mixtures that are long or very long, depending on the type of polycarbodiimide and on the type of the other components in the application mixture.

In a typical aqueous leather finish having no hydroxyl or other isocyanate-reactive groups the amount of polyisocyanate crosslinker has no relation to functional groups of the resin. On the contrary, polycarbodiimide crosslinkers function by reacting with carboxylic groups of the resin. Hence, there

exists a stoichiometric relation between the amount of polycarbodiimide crosslinker to be used ideally and the amount of carboxylic groups in the resin. However, it appears that for an optimal performance a higher or a lower level than the stoichiometric amount can be required. Running a dosage ladder will determine the optimum crosslinker level, and in leather finishing, typical use levels are often below stoichiometric.

**2. Materials and Methods**

Several polycarbodiimide crosslinkers were tested in resins RU-5509 and RU-3901. The materials used are: from Stahl Europe bv: XR-5501, a solvent-based water dispersible polycarbodiimide (50% solids); XR-5570, a 'multifunctional' solvent-based polycarbodiimide (50% solids); XR-5592, an aqueous polycarbodiimide (40% solids); XR-5350, a solvent-based isocyanate crosslinker (50% solids); RU-5509, an aliphatic polyurethane resin; RU-3901, an aliphatic polyurethane resin; and from Picassian: XL-732, an aqueous polycarbodiimide (40% solids); XL-725, a non-VOC 'multifunctional' polycarbodiimide (100% solids);

Stress-strain behavior gives an indication on the crosslinking level, in which the force (stress) needed for a certain elongation (strain) is determined and in which it is measured how much the film can elongate before the specimen breaks. The measurements were done using a MTS Synergie 200 from Adamel Lhomargy, with Testworks version 4 as software.

Another simple way to detect crosslinking is examining the solvent resistance of films with and without crosslinker using ethanol. Here, the ratio of the weight of films after and before emersion in ethanol is measured. The crosslinking capabilities were also tested when applied in a leather finish coating on leather. The test methods used here are Veslic tests, using 500 g weight, on samples with 10% extension; Bally flexes using 100,000 bends; Cold (Bally) Flexes at -18°C using 15,000 bends; in the WQF 1000 test (short for the German word Wasserquellefestigkeit) leather pieces are soaked for 1 hour in distilled water, and after draining the leather is tested on the Veslic rub machine for 1000 cycles with a wet felt. In the wet rubs test, testing is similar, but the leather is dry and rubbing is done with a felt that is soaked in distilled water.

The useful pot life of a formulated coating mixture with crosslinkers was determined by applying the aged formula as a topcoat to automotive upholstery leather, and then ageing that leather at room temperature while testing the leather at daily or more prolonged intervals to determine how many days of room temperature post-cure is needed to pass 500 wet/dry Veslic abrasion cycles (wet pad, dry leather, 10% extension of the leather, 1 kg load). In addition, the content of unreacted carbodiimide in mixtures with a polyurethane resin or a top coat formulation during aging was determined by following the loss of carbodiimide signal in the infrared spectrum as a function of ageing time.

**3. Results and Discussion**

The tensile properties and ethanol resistance (uptake) of non-crosslinked and crosslinked films for polyurethane dispersion RU-3901 are shown in Figure 1. The increased stress levels at certain strains for the crosslinked films showed that the films have become stronger and tougher than the none-crosslinked films. The multifunctional polycarbodiimide (XR-5570) indeed showed a higher crosslinking capability than both the aqueous polycarbodiimide crosslinker (XR-5592) and the solvent-based polycarbodiimide (XR-5501) since with similar amounts of crosslinker the tensile strengths had increased more. For reference, also an aziridine (XR-2500) and a polyisocyanate crosslinker (XR-5350) were employed. The aziridine crosslinker (in a typical amount of 2%) gave larger tensile strengths than the non-'multifunctional' polycarbodiimides, but lower than obtained with the 'multifunctional' polycarbodiimide. The tensile properties achieved with the polyisocyanate crosslinker were between those obtained with 'multifunctional' and non-'multifunctional' polycarbodiimides.

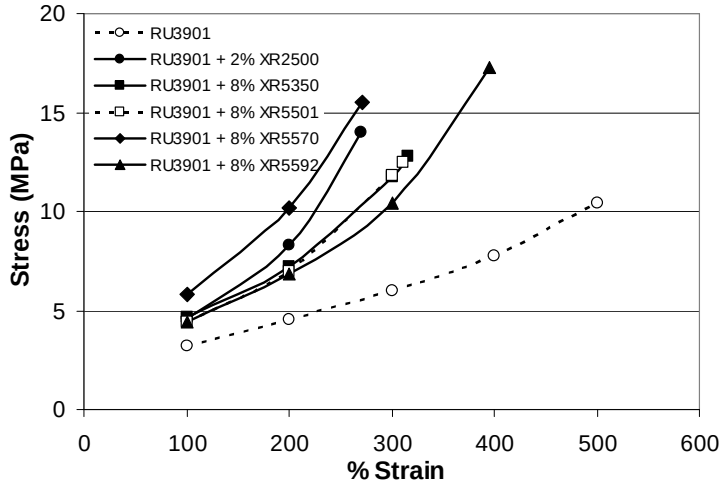


| Ethanol uptake | (%) |
|---|---|
| RU3901 | 455 |
| RU3901 + 2% XR2500 | 175 |
| RU3901 + 4% XR5350 | 256 |
| RU3901 + 8% XR5350 | 176 |
| RU3901 + 4% XR5501 | 225 |
| RU3901 + 8% XR5501 | 186 |
| RU3901 + 4% XR5570 | 201 |
| RU3901 + 8% XR5570 | 155 |
| RU3901 + 4% XR5592 | 207 |
| RU3901 + 8% XR5592 | 172 |

***Figure 1**: Tensile strengths and ethanol uptake of films of RU3901, with and without crosslinkers*

The ethanol uptake of these films was also evaluated and the uncrosslinked film swelled dramatically when emerged in ethanol. When a crosslinker is present the ethanol uptake decreased significantly. As with the tensile strengths, the solvent-based (XR-5501) and aqueous polycarbodiimide (XR-5592) displayed about the same influence on the ethanol uptake, whereas the multifunctional carbodiimide (XR-5570) had the largest effect on the film properties. Values in the ethanol uptake obtained with the aziridine and the polyisocyanate crosslinkers were similar as obtained with the non-'multifunctional' polycarbodiimides, but higher than with the 'multifunctional' polycarbodiimide. The changes in the film properties were obviously also dependent on the amount of crosslinker used, because more crosslinker enables more possible crosslinks. In this case 8% of polycarbodiimide or 2% aziridine crosslinker was less than the stoichiometric amount of crosslinker compared to the available carboxyl functionalities present in the polyurethane dispersion.

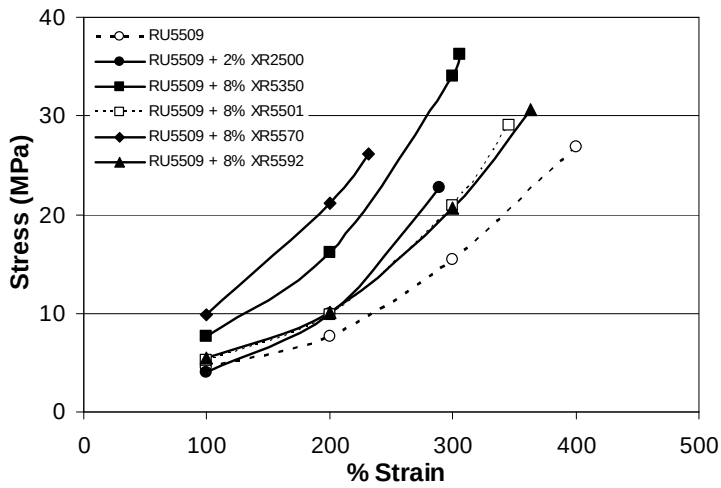


***Figure 2**: Tensile strengths of films of RU-5509, with and without crosslinkers*

The tensile strengths of films of polyurethane dispersion RU-5509 with and without crosslinkers are depicted in Figure 2. As was discussed with RU-3901, also for RU-5509 the tensile strengths were greatly improved when crosslinkers were used. The aqueous (XR-5592) and the solvent-based carbodiimide (XR-5501) gave about the same increases in stress, and the multifunctional polycarbodiimide (XR-5570) yielded the largest increase in tensile strengths when the same amounts of crosslinker were used. A non-VOC version of the XR-5570 does exist as well (XL-725 from

Picassian) and this crosslinker gave similar crosslinking performance as the XR-5570 when used in a corresponding (i.e. lower) amount.

The pot life of a coating application mixture is an important parameter since a short pot life is difficult to work with and will likely result in more waste due to incomplete consumption of the coating mixture. The stability of several crosslinkers in an application mixture was evaluated at a somewhat elevated temperature of 30°, using polyurethane dispersion RU-5509, which can serve as a simplified system for an actual coating formulation as used in the leather industry. At time intervals the isocyanate or carbodiimide content was assessed by infra red analysis and the results are graphically depicted in Figure 3. As expected, the stability of an isocyanate in an aqueous dispersion was short, which corresponds with a pot life of 4 to 8 hours as usually stated for such products. The solvent-based polycarbodiimide was for the most part still intact in the mixture after 5 hours and even after 24 hours about 70% of the carbodiimide was still present. The aqueous polycarbodiimides, XR-5592 and XL-732, displayed a much better stability: after 24 hours more than 90% of the carbodiimide was still intact and a large portion even after several days. The XL-732 type aqueous polycarbodiimide displayed the best stability in such a mixture because after 11 days about 95% and after 18 days about 70% of the original carbodiimide groups were still intact. This results in an effective pot life of several days or even weeks to formulated mixtures with the XL-732, and of several days with the XR-5592. The actual pot life that can be obtained with the aqueous polycarbodiimide crosslinkers in an application mixture is also dependent on temperature (lower temperatures are better), pH (higher pH is better) and resin types that are in the mixture.

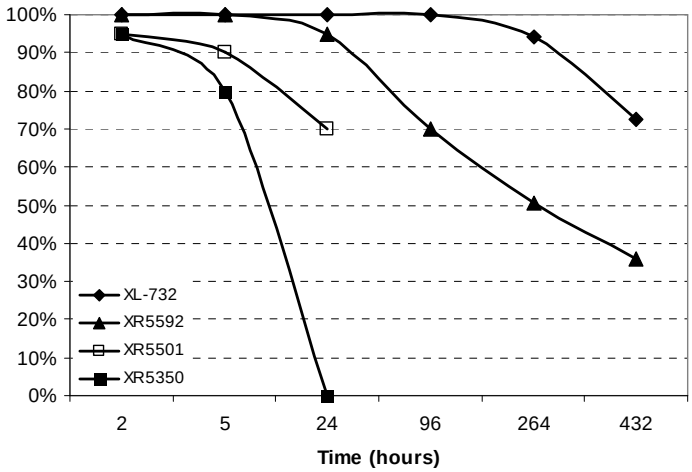


***Figure 3**: Stability of several crosslinkers in polyurethane dispersion RU-5509, at 30°C*

A stability / pot life test was also executed using a typical leather formulation in combination with the aqueous polycarbodiimide crosslinker (XR-5592). This formulated topcoat when aged for up to about 13 days passed this go/no-go test after less than 2 days of post-curing and a longer post-curing time was required with formulated mixtures that were aged longer than 13 days (See Figure 4). But even a top coat formulation that was aged for 30 days could pass this test, although then 5 days of post-curing time was required. This system was still stable after 1 year, and about 23% of the carbodiimide was still present according to the spectroscopic measurements. It was possible to pass 150 of the Veslic abrasion cycles with this one-year old formulation, and upon re-inoculation this could be increased to 350 Veslic cycles.

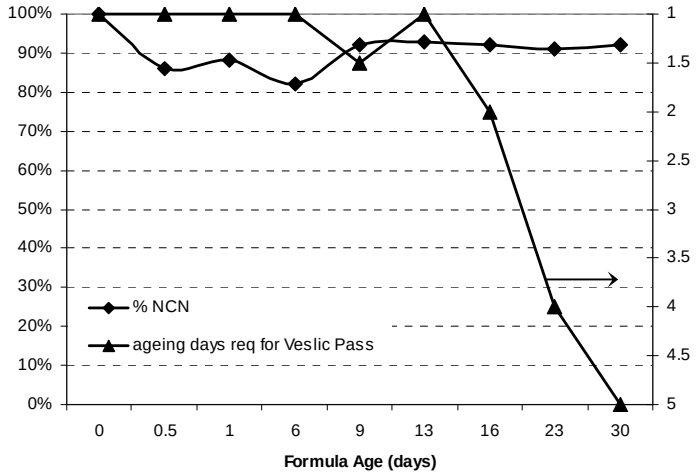


***Figure 4**: Performance and persistence of carbodiimide XR-5592 in formulated top coat mixture*

The capabilities of various polycarbodiimide crosslinkers were evaluated on leather in a typical automotive top coat system versus an isocyanate crosslinker as reference. The top coat was sprayed twice in 2.5 g per square feet on leather that was already base coated, which contained 3% of XR-5592 as crosslinker. The reference isocyanate crosslinker (XR-5350) was added in a typical 10% amount, whereas most of the polycarbodiimides were added in a 5% amount compared to the total top coat formulation. Only XL-725 was added in a smaller dosage to compensate for its higher content. The leather pieces were cured for 5 minutes at 70°C in an oven and after 24 hours they were subjected to various tests. The results are collected in Table 1.

***Table 1:** Evaluation results# of various crosslinkers in a typical automotive top coat on leather*

| | No XR | XR-5350 | XR-5592 | XL-732 | XR-5570 | XL-725 |
|---|---|---|---|---|---|---|
| Dosage (% of total top coat): | - | 10 | 5 | 5 | 5 | 3 |
| Wet rubs 1000 | 4 | 5 | 4 | 5 | 5 | 5 |
| Sweat rubs 300 | 3 | 5 | 4 | 4/5-5 | 5 | 5 |
| WQF 1000 | 1 | 5 | 4 | 1/2 | 1 | 3/4 |
| Flex 100,000 | 1 | 5 | 5 | 5 | 4 | 5 |
| Cold -18°C Flex 15,000 | 1 | 5 | 5 | 5 | 4 | 5 |

# Rating on a 1 to 5 scale: 1 is worst and 5 is best

When no crosslinker was employed a fair rating was obtained in the wet rubs and the sweat rubs tests, but the results obtained in the WQF, the flex test and the cold flex test were very poor. Clearly, the addition of a crosslinker improves the performance significantly. All polycarbodiimide crosslinkers tested gave a good to satisfactory outcome in the 100,000 Flex and the Cold Flex tests, since only the leather with XR-5570 showed some minor damage after 100,000 flexes. Probably, the crosslinking was somewhat too strong here because of the multifunctionality in the XR-5570, as described in the introduction. Both 'multifunctional' polycarbodiimides (XR-5570 and XL-725) gave an excellent performance in the wet rub and the sweat rubs tests, however only the XL-725 gave a satisfactory outcome in the WQF test. The aqueous polycarbodiimide XR-5592 showed some minor damage after the wet rub, sweat rub and the WQF tests (all a 4-rating). The other aqueous product XL-732 yielded a better outcome in the wet rub and the sweat rub tests (5 or 4/5-5 rating), but a lesser outcome in the WQF test. Only the reference isocyanate crosslinker scored a 5 in all tests, whereas each particular polycarbodiimide scored some 5 ratings, but not one scored a 5 rating in all tests.
The results demonstrate that both aqueous and 'multifunctional' polycarbodiimide crosslinkers were able to boost the performance of the coating on leather, making them a feasible alternative for a polyisocyanate crosslinker. Although the polycarbodiimide did not score the highest ratings in all of the tests, they also have other advantages over an isocyanate crosslinker such as a friendlier

classification, greater easy of use and longer to much longer pot life, so that one should consider all these properties while selecting which crosslinker to employ in leather finishing.

## 4. Conclusions

The work described here has shown that polycarbodiimides can be feasible crosslinkers in leather finishing. They improve the performance of a coating on leather to good level, in which the properties desired may steer the selection for which type of polycarbodiimide to be used. Crosslinking evaluation in a typical polyurethane resin showed that the 'multifunctional' polycarbodiimides yielded a higher crosslinking performance than normal polycarbodiimides and both types showed similar or better crosslinking than isocyanate or aziridine crosslinking.

The advantages of using polycarbodiimide crosslinkers are their much friendlier classification than both isocyanates / aziridines, that there exist polycarbodiimide types that have no VOC: the aqueous polycarbodiimides or the non-VOC 'multifunctional' polycarbodiimides, and that there are polycarbodiimide types that provide a very long pot life to their application mixtures and that are very easy to use: the aqueous polycarbodiimides.

## 5. References

1 D. Urban, K. Takamura, Polymer Dispersions and Their Industrial Applications, Wiley-VCH Verlag GmbH, Weinheim, 2002

2 M.A. Winnik, *J. Coatings Techn.* **2002**, *74*, 49-63.

3 Mikołajczyk, M.; Kiełbasiński, P. *Tetrahedron* **1981**, *37*, 233-284.

4 Chan, V.W.F.; Jorgensen, A.M.; Borders, C.L. *Biochem. and Biophys. Res. Comm.* **1988**, *151*, 709-716.

5 Schotman, A.H.M. *Recl. Trav. Chim. Pays-Bas* **1981**, *110*, 319-324.

6 Posthumus, W.; Derksen, A.J.; van den Goorbergh, J.A.M; Hesselmans; L.C.J. *Progress in Organic Coatings* **2007,** *58*, 231–236.

7 Williams, A.; Ibrahim, I.T. *Chem. Rev.* **1981**, *81*, 589-636.

8 Wagner, K.; Findeisen, K.; Schäfer, W.; Dietrich, W. *Angew. Chem. Int. Ed. Eng.* **1981**, *20*, 819-898.

9 Kurzer, F.; Douraghi-Zadeh, K. *Chem. Rev.* **1967**, *67*, 107-152.

10 Campbell, T.W.; Monagle, J.J.; Foldi, V.S. *J. Am. Chem. Soc.* **1962**, *84*, 3673-3677.

11 EU patent 507407, US patent 5258481, JP patent 5117221, Hesselmans, L.C.J.; Van den Goorbergh, J.A.M. *to* Stahl Holland B.V., 3 April 1991.

12 US Patent 7439316, Hesselmans, L.C.J.; Derksen, A.J.; Munneke, J.C. *to* Stahl International bv, 3 July 2003.

13 EU patent 0878496, JP patent 10316930, US patent 6124398, Imashiro, Y.; Takahashi, I.; Horie, N.; Yamane, T.; Suzuki, S. *to* Nisshinbo Industries Inc., 15 May 1998.

14 EU Patent 1981922, Hesselmans, L.C.J.; Derksen, A.J. *to* Stahl International bv, 10 January 2007.

## 6. Acknowledgements

The authors would like to thank colleagues K. Brighouse, J. van Aarst, J. Levy, L. Hesselmans and R. van der Bruggen for their kind help in the experiments and interesting discussions, and Stahl International bv for permission to publish this paper.