Studies on Some Environmental Conservation Strategies in a Common Effluent Treatment Plant for a Leather Cluster

[1]Perumal Singaraj Sureshkumar, [2]Paramjit Singh Bilga, [3]Shanmugam Venkatachalam Srinivasan and [4]Ethirajulu Ravindranath,[5]Banagaru Chandrasekaran

[1, 3, 4 & 5] Central Leather Research Institute, Adyar, Chennai-600020
ps_skumar@yahoo.com

[2] Guru Nanak Dev Engineering College, Gill Park, Ludhiana-141006
psbilga@gndec.ac.in

Abstract:

Leather industry occupies a place of prominence in the socio-economic firmament of the nation in view of its substantial export earnings and employment generation. There are more than 2000 tanneries located in India with a total processing capacity of 700,000 tones of hides and skins per year. Sustainability of tanneries, particularly the small and medium scale enterprises (SMEs), is difficult because of alarming levels of environmental pollution caused by various tanning operations and practices. Common Effluent Treatment Plants (CETPs) were the cost effective option for compliance with the effluent discharge standards for SMEs in industrial clusters. CETPs require considerably large amounts of energy to transport, treat and discharge treated effluent and also emit huge amount of green house gases (GHGs) directly and indirectly to the environment. In the present study, two CETPs operating in Tamilnadu have been taken up. The sludge handling at these CETPs has been studied for environmental conservation viewpoint. These CETPs were having conventional treatment units (open anaerobic lagoons) followed by aerobic system. The CETPs have been upgraded with Central Leather Research Institute, India as technical agency on turnkey basis. It is seen that the Carbon Emission Reductions (CERs) earned by dewatering of sludge using chamber filter press instead of conventional sludge drying beds is around 45% for both the CETPs.

Key words: *effluent, emission, leather, conservation*

1. Introduction

The leather industry in India owes its origin and growth to the strong and wide spread livestock base in the country. Today the industry ranks 8th in the export trade in terms of foreign exchange earnings of the country [1]**.** The Indian leather sector is organized as tanning and finishing, footwear & footwear components, leather garments, leather goods (bags, wallets, belts, gloves, and accessories), saddlery and harness articles. The major production centers for leather and leather products are located in Tamil Nadu, West Bengal, Uttar Pradesh, Maharashtra, Punjab, Karnataka, Andhra Pradesh, Haryana and Delhi. More than 90% tanneries are in small-scale sector with a processing capacity of less than 3 tons of hides/skins per day [2]**.**

The wastewater discharged from the tanneries is about 100000 m^3/day in India. The wastewater discharged, if untreated or treated below standards, invariably deteriorates the environment it is discharged in [3]. CETPs can contribute significantly towards high-energy consumption and consequently increased GHG emissions. Thus, energy savings is crucial for CETPs to meet national and international targets for reducing GHGs. In the present study, two CETPs in Tamilnadu have been taken up for the energy conservation and its impact on global warming potential. The energy consumption for different treatment stages has been analyzed for both the CETPs before and after up gradation.

Treating of tannery effluent is an energy intensive operation. In treatment process, energy is required for pumping effluent from one tank to another, mixing of effluent/ chemicals, aeration, sludge dewatering etc. Energy costs account for 30-40% of the total operation and maintenance (O&M) costs of CETPs [4&5]. One of the most serious forms of environmental problems threatening both human health and sustainable development is emission of GHGs. Some of the unit operations lead to emission of methane in to atmosphere which is one of the important GHGs among gases listed by United Nations Framework Convention on Climate Change (UNFCCC), which needs to be, controlled [6].

2. Materials and Methods

2.1 Selection of CETPs for the study

Chennai and nearby districts in the State of Tamil Nadu account for about 36 per cent of the Indian leather industry's total exports. About 6 per cent of the world supply of finished leather is manufactured in Tamil Nadu. The clusters in Tamil Nadu are largely located in Chennai and in clusters in nearby districts, that is, for example, in Ambur, Ranipet, Vaniambadi, Trichy, Erode and Dindigul. The cluster in the Chennai region in Tamil Nadu have several advantages over other leading clusters such as Kanpur and Agra in terms of factor conditions by way of convenient access to large (also imported) raw material and tannery base, and port facilities. About Rs. 5385 crore (about USD 1.1 billion) worth of leather and leather products is exported through Chennai - produced in Tamil Nadu [1].

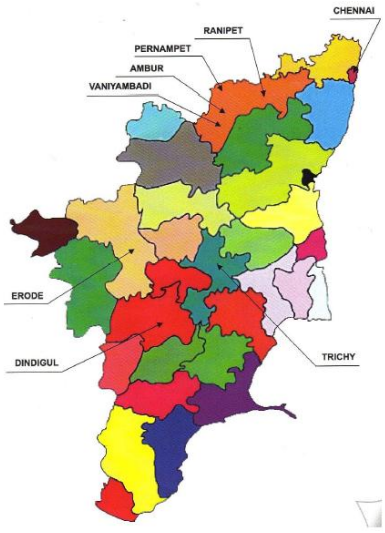

Figure 1 Location of clusters in Tamilnadu

In the Tamilnadu cluster, tanneries either have individual ETPs or are connected to CETPs. All the clusters apart from Trichy are connected to CETPs. In this study we have selected two CETPs in Tamilnadu region, with a capacity of treating effluent to the tune of 4000 m^3/month. The effluent discharged from both the clusters is from tanneries processing raw to finish. The CETPs have been analyzed for energy consumption and its effect on global warming potential.

The wastewater from 110 tanneries, processing raw skins/ hides, is treated in the CETP I. Chrome tanning process is used in these tanneries. The CETP II was designed to treat wastewater flow of 4000 m^3 / day generated from 76 tanneries. The tanneries connected to CETP process from raw to finished leather, and semi, finished to finished leather based on vegetable tanning process, except for a few units, which are based on chrome tanning. Details and Schematic of CETP I and CETP II are shown in Fig 1& 2 and Table 1respectively

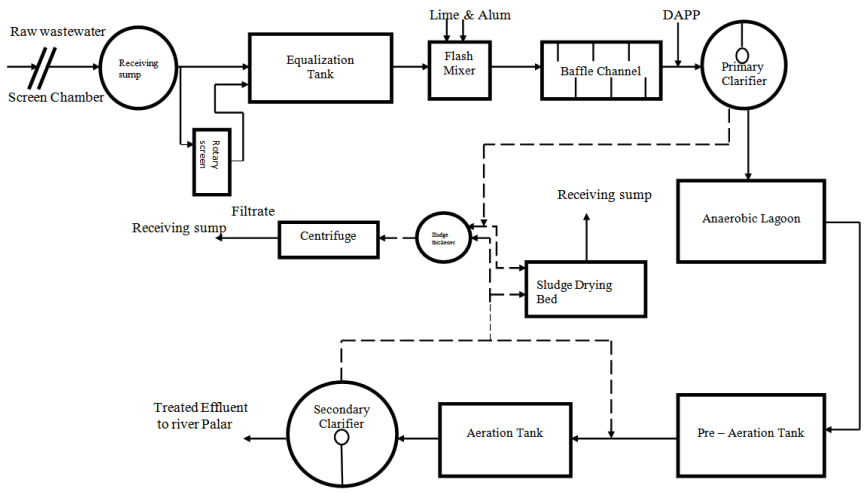

Figure 1

Schematic of CETP I

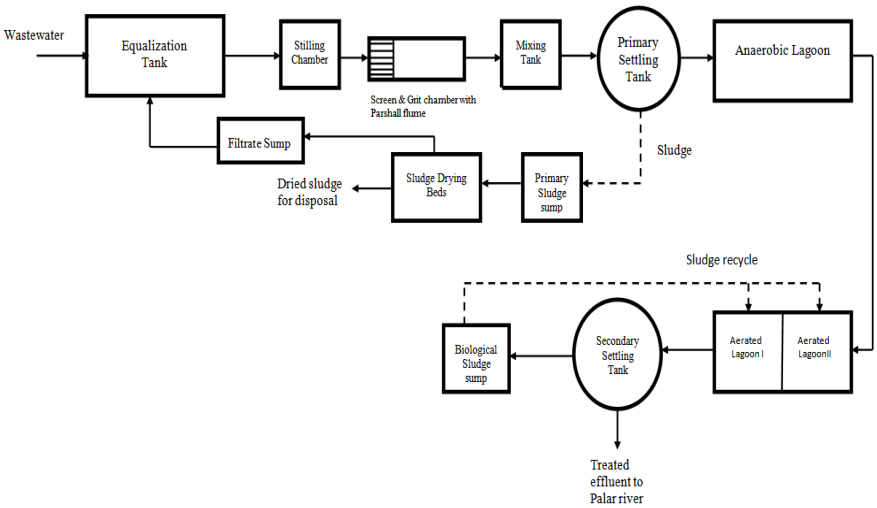

Figure 2 Schematic of CETP II

DETAILS	CETP I	CETP II
Capacity in m^3/day	4000	4000
No. of Tanneries attached to the CETP	76	110
Total Influent in m^3/month	104017	118234
Electricity Utilization in kWh/month.	208390	171976

Table 1 Details of CETPs before upgradation

2.2 GHGs Emission in CETPs before upgradation

The contribution of electricity, diesel fuel consumption and anaerobic lagoon towards the total CO_2emission from operation of the CETP before upgradation is shown in Table 2

DETAILS	CETP I	CETP II
Electricity consumption per year in MWh per year for running the CETP	1904	1805
CO_2 emission due to electricity consumption in tCO_2/MWh per year	1885	1787
Diesel fuel consumption per year in MWh per year for running the CETP	597	259
CO_2 emission due to diesel consumption in tCO_2/MWh per year	430	186
CO_2 emission from anaerobic lagoon in tCO_2e/year	4210	4537
Total CO_2 emission* from operation of plant in tCO_2/year	6525	6510

Table 2 CO_2 emission due electricity & diesel consumed and by open anaerobic lagoon at **CETP I** & **CETP II** before upgradation

2.3 Upgradation work carried in equalization tanks and aeration tanks at both the CETPS

While analyzing the power consumption in individual units per month at the CETPs, it was found that high energy was spent for equalizing the effluent and for biological

treatment (aerobic) of the wastewater. It is seen that power consumed for equalizing the effluent was in the range of 18000 to 23000kWh/ month whereas power consumption for biological treatment was in the range of 100000 to 109949 kWh/month for the CETPs taken up in this study.

2.4 Equalization tank

Appropriate submersible mixer for the equalization tank at CETPs were selected and installed instead of the existing floating type aerators. Six mixers of capacity 2.5 kW and three mixers of capacity 7.45 kW were installed in **CETP I** and **CETP II** respectively.

2.5 Aeration tank

The aeration tank was upgraded with diffused aeration system comprising of diffusers consisting of porous membrane made of Ethylene Propylene Diene Monomer (EPDM) rubber material. The diffuser was designed to ensure uniform permeability and to produce a flow of fine air bubbles approximately 2 mm in diameter. Air was supplied to the diffusers through blowers of capacity 1944m^3/hr (4nos.) and 2400 m^3/hr (3 Nos.) at **CETP I** and **CETP II** respectively.

DETAILS	CETP I	CETP II
Total Influent in m^3/month	71077	83223
Electricity Utilization in kWh/month	10965.	16359.

Table 3 Details of CETPs after upgradation

The average total flow recorded for the two year period after upgradation at the CETP I is 71077m^3/ month. During the same period CETP II received 83223m^3/ month. The total flow at both the CETPs has reduced considerably owing to some water conservation strategies employed in individual tanneries. The average electricity consumption per month at equalization tank and aeration tank after upgradation is shown in Table 4. The average electricity consumption at equalization tank for CETP I and CETP II are 10965 and 16359kWh/ month respectively.

DETAILS	CETP I	CETP II
Emission due to electricity consumption in tCO_2/MWh per year for equalizing the effluent	130	195

after upgradation using submersible mixer		
Emission due to electricity consumption in tCO_2/MWh per year at aeration tank after upgradation using diffused aeration system	879	713

Table 4 CO_2 emission reductions at equalization tank, aeration tank of CETPs after upgradation

3. RESULTS & DISCUSSION

The detailed background information and analyses for CETP I AND CETP II with respect to flow, electricity consumption have already been explained. The data taken before upgradation of the CETP and after upgradation have been analyzed for GHGs emission and listed earlier. Figure 3 shows the electricity consumption at equalization tank and aeration tank of CETP I and CETP II after the introduction of submersible mixers in respective equalization tanks and installation of diffused aeration systems in the aeration tanks of both the CETPs.

Figure 3 Floating type aerators being used in equalization tank at CETPII before upgradation

Figure 4 Submersible mixer being used equalization tank at CETP II after upgradation

CETP	CO_2 emission due to electricity consumption at equalization tank in tCO_2/MWh per year		Reduction in tCO_2/MWh per year
	Before upgradation	After upgradation	
I	285	130	53%
II	229	195	13%

Table 5 CO_2 emission reduction at equalization tank at the selected CETPs

A summary of the results obtained upon emissions analysis for equalizing the effluent before and after upgradation at both the CETPs is shown in the Table 5. Emission in CETP I and CETP II before upgradation was 285 and 229 tCO_2/MWh per year respectively. The CO_2 emission reduction in tCO_2/MWh per year using

submersible mixer in the equalization tanks instead of surface aerators at CETP I and CETP II is 152 and 32 respectively. The percentage reduction of CO_2 emission after upgradation for equalizing the effluent is 53% and 13% for CETP I and CETP II respectively.

CETP	**CO_2 emission due to electricity consumption at aeration tank in tCO_2/MWh per year**		**Reduction in tCO_2/MWh per year**
	Before upgradation	After upgradation	
I	1269	879	31%
II	1306	713	45%

Table 6 CO_2 emission reduction at aeration tank at the selected CETPs

Figure 6 Surface aerators being used in aeration tank at CETP I before upgradation

Figure 7 Diffused aeration system employed in aeration tank at CETP I after upgradation

The results obtained upon emissions analysis at aeration tank in both the CETPs are listed in the Table 6. Emission at aeration tank of CETP I before and after upgradation is 1269 and 879 tCO_2/MWh respectively. Whereas emission at aeration tank in CETP II before and after upgradation is 1306 and 713 respectively. The reduction in CO_2 emission at aeration tank after upgradation at CETP I and CETP II is 31 and 45% respectively.

It is evident from the comparison of CETPs, that the reduction in CO_2 emission for equalizing the effluent is 53% and 13% for CETP I and CETP II respectively. The CO_2 emission reduction at aeration tank is 31and 45% for CETP I and CETP II respectively.

4. CONCLUSIONS

1. It is seen that the percentage reduction of CO_2 emission using submersible mixers instead of surface aerators in the equalization tank is 53% and 13% for CETP I and CETP II respectively.
2. The CO_2 emission reduction at the aeration tank after upgradation of the CETPs is 31% and 45% for CETP I and CETP II respectively.
3. The CO_2 emission reduction in CETP II is higher than CETP I at the aeration tank, whereas CO_2 emission has reduced in CETP I at equalization tank when compared to CETP II.
4. It is seen that the percentage reduction of CO_2 emission using submersible mixers instead of surface aerators in the equalization tank is 53% and 13% for CETP I and CETP II respectively.
5. The CO_2 emission reduction at the aeration tank after upgradation of the CETPs is 31% and 45% for CETP I and CETP II respectively.
6. The BOD removal efficiency after upgradation has also increased by 18% and 23% for CETP I and CETP II.
7. It is observed that the COD removal efficiency after upgradation has increased by 5% and 7% for both the CETPs
8. The percentage reduction in CO_2 emission for dewatering the sludge using filter press instead of conventional sludge drying beds is 44% and 48% for CETP I and CETP II respectively.
9. The CO_2emission reduction in CETP II is higher than CETP I at the aeration tank and for sludge dewatering using filter press, whereas CO_2 emission has reduced in CETP I at equalization tank when compared with CETP II.

5. Reference

[1]. Council for leather exports (2009) "*Leathers: The complete leather magazine*", CLE publications

[2]. http://www.leatherindia.org dated Dec, 2009

[3]. Tare, M.M. Gada, M..K. Siddiqui, M..A. and Mehta, M.H. (1991), "*Econmics of desalination in water resource management - a comparison of alternative water resources for arid/semi arid zones in developing countries"* Proceedings of the Twelfth International Symposium on Desalination and Water Re-use, vol. 81(1-3), pp.57-76

[4]. Nobuyuki, S. Tsutomu, O. Takashi, O. Lalit, K. A. Akiyoshi, O. and Hideki, H. (2007) "*Economic evaluation of sewage treatment processes in India"*, Journal of Environmental Management, vol. 84, pp. 447–460

[5]. Tare, V. Sandeep, G. and Purnendu, B. (2003) "*Case studies on biological treatment of tannery effluents in India"*, vol. 53, 8, pp. 976-82.

[6]. http://cdm.unfccc.int/methodologies/approved.